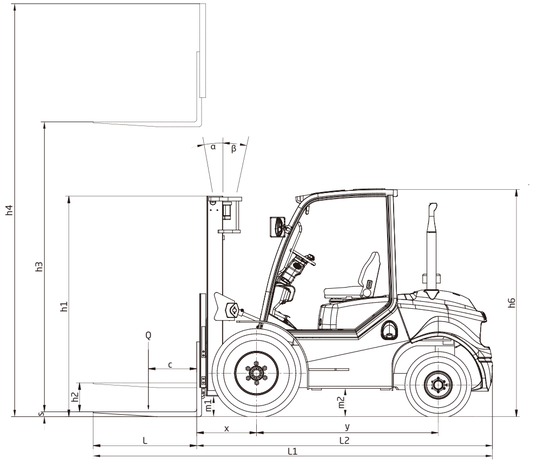

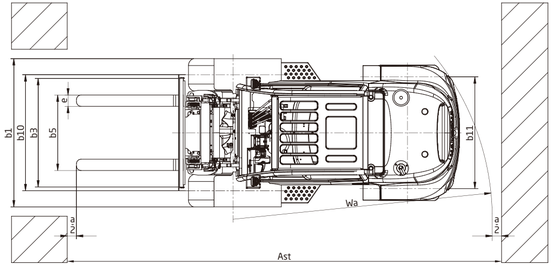

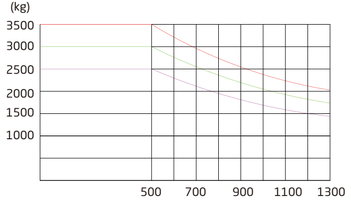

HANGCHA

ZHEJIANG HANGCHA IMP. & EXP. CO., LTD.

Factory site: 666 Xiangfu Road,
Hangzhou, Zhejiang, China (311305)

Tel: +86-571-88926735 88926755
Fax: +86-571-88926789 88132890

sales@hcforklift.com
www.hcforklift.com

Follow us on Facebook

Follow us on YouTube

Follow us on WeChat

Download "Hangcha Forklift" App

ISO14001:2015

ISO9001:2015

HANGCHA trucks conform to the European Safety Requirements.

2021 VERSION 2/COPYRIGHT 2021/09

HANGCHA GROUP CO., LTD. reserves the right to make any changes without notice concerning colors, equipment, or specifications detailed in this brochure, or to discontinue individual models. The colors of trucks, delivered may differ slightly from those in brochures.

Two-Wheel Drive Rough Terrain Forklift

with capacities of 2,500 to 3,500kg

The World of Hangcha

HANGCHA

HANGCHA be with you at every stage

Efficient, reliable solutions for your demands

STAGE V & TIER 4F

With Hangcha you can meet all Stage V/Tier 4f emissions standards which provides customer demands for value, innovation and performance. The technologies include common rail fuel systems, diesel oxidation catalysts (DOC) and diesel particulate filters (DPF). Designed and optimised to every engine model, our forklift truck maximises efficiency and reliability.

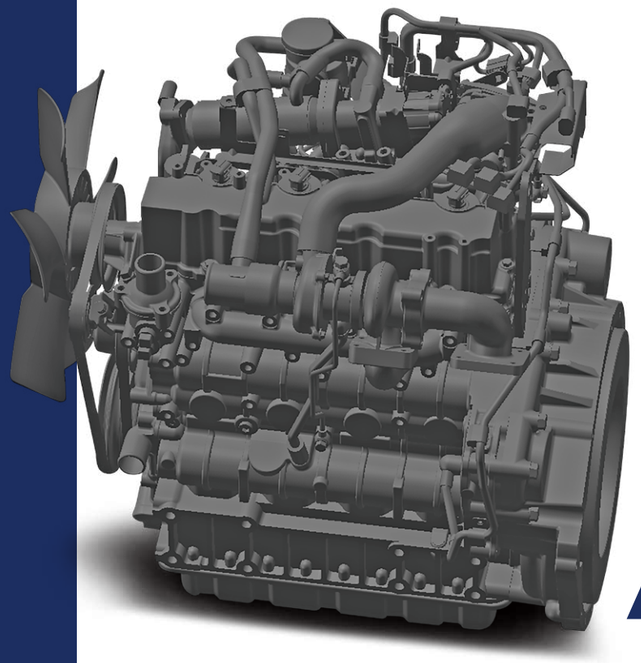

KUBOTA

Interactive instrument: The instrument adopts 4.0-inch color LCD display with four interactive buttons, and has one CAN bus communication function. The communication protocol is compatible with SAE J1939 standards.

HANGCHA Forklift with StageV and T4F

No.	Capacity	Series	Manufacturer	Engine	Drive power	Model	Emission Std.	Transmission	Power (kw/rpm)
1	2.5-3.5t	RT	KUBOTA	V2607-CR-TE5B	Diesel	CPCD25/30/35-XW98E-RT2	StageV / Tier4 final	CHINA	47.3/2400

Note: RT means 2WD/4WD Rough Terrain forklift

Powerful/ Efficient/ Reliable

Two-Wheel Drive Rough Terrain Forklift

Hangcha 2.5~3.5t rough terrain forklifts is a tough, compact forklift with a two-wheel drive system. It is based on XF series IC forklift truck. It is world renowned for superior performance, economy and longevity.

Reliability

/ Suspension hydraulic transmission with two forward gears and one reverse, providing higher speed and greater gradeability; Drive axle is equipped with wide-base and deep tread tires, enhanced brakes, bearings, differential with automatic locking function, as well as enhanced steering axle assembly providing ultimate traction during inclement weather conditions and rough operating surfaces.

/ Dual air filter\extra capacity combined radiator with serpentine wave and optimized heat dissipation channel enhance the heat dissipation capability to keep engine reliability even in heavy-duty applications. Oscillating steer axle allows either wheel to step over obstacles keeping the truck and load level, high ground clearance offers greater maneuverability and keeps the truck moving in the roughest of applications.

/ The new vehicle controller integrates all electrical components, features excellent durability for temperature\water and vibration, and the oil filter/return oil filter are all work for the most demanding operation.

Environmental friendliness

/ Each model employs a specially developed engine for the optimum balance of power and superior environmental performance, the truck is in compliance with EU Ⅲ and EAP Ⅲ control regulation.

/ The environment friendly materials, such as non-asbestosbrake shoe and new type sealing gasket, are adopted entirely to meet environmental safety. And the noise level is reduced too.

The new efficiency lighting system employs LED illuminant and new type reflector to reduce energy consumption, improve significantly illumination performance and prolong work time

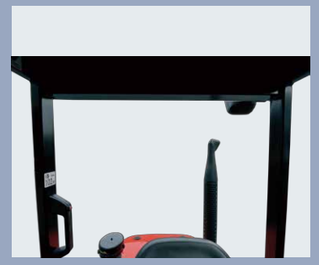

Optimized designing structure to offer a good visibility and easy entrance of the pallet

The new designed steering wheel\ new brake system and the easy-to-operate levers provide total handling operation

The easy-to-open hook provides quick access to the engine compartment

The large, spacious cab of our new boasts left and right grab handles with wide-opening doors for easy access

Productivity

/ The new Dynamic load sensing hydraulic steering system contributes to reduce loss of hydraulic and improve energy efficiency.

Easy maintenance

/ The cover on the Panel can be lifted up simply to check the brake fluid.
/ The two-piece design makes the floorboard easy to lift and remove for access to the power train.
/ The fasteners of the radiator cover can be turned easily by hand to enable quick inspections or servicing.

Comfortable operation

/ In developing the rough terrain forklift, comfort and easy operation is always considered, for example, improved vibrating levels, compound engine damper and full floating seat and cabin are all applied. Comfortable also contribute to increased productivity and reduced the noise.
/ The extra foot space is provided to reduce operator fatigue significantly, non-slip step makes getting in and out easy and safe.
/ The new design mast provides broad forward visibility due to the longer distance between inside mast.

Standard specification

/ Suspension transmission
/ Overhead gaurd
/ Suspension seat
/ Return oil filter
/ Big capacity aluminum radiator
/ Air filter
/ Rear working light
/ Warning lamp
/ Cover for tilt cylinder
/ Net cover of radiator
/ Reversing assist grip
/ Wider fork carriage
/ Wider load backrest
/ LED light

Options

/ Cabin
/ Heater
/ Front window
/ L/R mirror
/ Extinguisher
/ Customer painting
/ OPS system
/ Sparkle arrester
/ Purified exhaust system
/ Auxiliary hydraulic valve
/ Front working light
/ Triplex wide view free-lift mast
/ Special forks
/ Weigher system
/ Attachments

Two-Wheel Drive Rough Terrain Forklift

Distinguishing mark	1.1	Manufacturer		HANGCHA GROUP CO.,LTD.										
	1.2	Manufacturer's type designation		CPCD25-XW33E-RT	CPCD30-XW33E-RT	CPCD35-XW33E-RT	CPCD25-XW43E-RT	CPCD30-XW43E-RT	CPCD25-XW98E-RT2	CPCD30-XW98E-RT2	CPCD35-XW98E-RT2	CPCD25-XG72E-RT2	CPCD30-XG72E-RT2	CPCD35-XG72E-RT2
	1.3	Drive: electric (battery or mains), diesel, petrol, fuel gas		Diesel	Diesel	Diesel	Diesel	Diesel	Diesel	Diesel	Diesel	Diesel	Diesel	Diesel
	1.4	Operator type: hand, pedestrian, standing, seated, order-picker		Seated	Seated	Seated	Seated	Seated	Seated	Seated	Seated	Seated	Seated	Seated
	1.5	Rated capacity/rated load	Q (kg)	2500	3000	3500	2500	3000	2500	3000	3500	2500	3000	3500
	1.6	Load centre distance	c (mm)	500	500	500	500	500	500	500	500	500	500	500
	1.8	Load distance, centre of drive axle to fork	x (mm)	585	600	600	585	600	585	600	600	585	600	600
	1.9	Wheelbase	y (mm)	1880	1880	1880	1880	1880	1880	1880	1880	1880	1880	1880
Weight	2.1	Service Weight	kg	4670	5120	5380	4670	5120	4670	5120	5380	4670	5120	5380
	2.2	Axle loading, laden front/rear	kg	6050/1120	7080/1040	7800/1080	6050/1120	7080/1040	6050/1120	7080/1040	7800/1080	6050/1120	7080/1040	7800/1080
	2.3	Axle loading, unladen front/rear	kg	2010/2660	2300/2820	2280/3100	2010/2660	2300/2820	2010/2660	2300/2820	2280/3100	2010/2660	2300/2820	2280/3100
Tyres, chassis	3.1	Tyres: solid rubber, superelastic, pneumatic, polyurethane		Pneumatic	Pneumatic	Pneumatic	Pneumatic	Pneumatic	Pneumatic	Pneumatic	Pneumatic	Pneumatic	Pneumatic	Pneumatic
	3.2	Tyre size, front		12-16.5-14PR	14-17.5-14PR	14-17.5-14PR	12-16.5-14PR	14-17.5-14PR	12-16.5-14PR	14-17.5-14PR	14-17.5-14PR	12-16.5-14PR	14-17.5-14PR	14-17.5-14PR
	3.3	Tyre size, rear		27×10-12-12PR	27×10-12-12PR	27×10-12-12PR	27×10-12-12PR	27×10-12-12PR	27×10-12-12PR	27×10-12-12PR	27×10-12-12PR	27×10-12-12PR	27×10-12-12PR	27×10-12-12PR
	3.5	Wheels, number front / rear (x = driven wheels)		2x/2	2x/2	2x/2	2x/2	2x/2	2x/2	2x/2	2x/2	2x/2	2x/2	2x/2
	3.6	Tread, front	b_{10} (mm)	1250	1250	1250	1250	1250	1250	1250	1250	1250	1250	1250
	3.7	Tread, rear	b_{11} (mm)	1200	1200	1200	1200	1200	1200	1200	1200	1200	1200	1200
Dimensions	4.1	Tilt of mast/fork carriage forward/backward	α/β(°)	10/12	10/12	10/12	10/12	10/12	10/12	10/12	10/12	10/12	10/12	10/12
	4.2	Height, mast lowered	h_1 (mm)	2215	2350	2350	2215	2350	2215	2350	2350	2215	2350	2350
	4.3	Free lift	h_2 (mm)	140	145	145	140	145	140	145	145	140	145	145
	4.4	Lift	h_3 (mm)	3000	3000	3000	3000	3000	3000	3000	3000	3000	3000	3000
	4.5	Height, mast extended	h_4 (mm)	4122	4142	4142	4122	4142	4122	4142	4142	4122	4142	4142
	4.7	Height of overhead guard (cabin) Std.	h_6 (mm)	2390	2420	2420	2390	2420	2390	2420	2420	2390	2420	2420
		Height of overhead guard (cabin) Opt.	h_6 (mm)	2240	2270	2270	2240	2270	2240	2270	2270	2240	2270	2270
	4.19	Overall length	l_1 (mm)	4205	4220	4220	4205	4220	4205	4220	4220	4205	4220	4220
	4.20	Length to face of forks	l_2 (mm)	2985	3000	3000	2985	3000	2985	3000	3000	2985	3000	3000
	4.21	Overall width	b_1(mm)	1557	1599	1599	1557	1599	1557	1599	1599	1557	1599	1599
	4.22	Fork dimensions	s/e/l (mm)	40×122×1220	50×122×1220	50×122×1220	40×122×1220	50×122×1220	40×122×1220	50×122×1220	50×122×1220	40×122×1220	50×122×1220	50×122×1220
	4.23	Fork carriage DIN 15 173 --- ISO 2328, class/type A,B		B	B	B	B	B	B	B	B	B	B	B
	4.24	Fork-carriage width	b_3 (mm)	1150	1150	1150	1150	1150	1150	1150	1150	1150	1150	1150
	4.25	Distance between fork-arms	b_5 (mm)	290-1150	290-1150	290-1150	290-1150	290-1150	290-1150	290-1150	290-1150	290-1150	290-1150	290-1150
	4.31	Ground clearance, laden, below mast	m_1 (mm)	240	270	270	240	270	240	270	270	240	270	270
	4.32	Ground clearance, centre of wheelbase	m_2 (mm)	270	300	300	270	300	270	300	300	270	300	300
	4.34	Aisle width	A_{st} (mm)	4885	4900	4900	4885	4900	4885	4900	4900	4885	4900	4900
	4.35	Turning radius	W_a (mm)	2900	2900	2900	2900	2900	2900	2900	2900	2900	2900	2900
Performance data	5.1	Travel speed, laden/unladen	km/h	24/26	26/28	26/28	24/26	24/26	24/26	26/28	26/28	24/26	26/28	26/28
	5.2	Lift speed, laden/unladen	m/s	0.620/0.640	0.490/0.510	0.430/0.510	0.620/0.640	0.490/0.510	0.620/0.640	0.470/0.510	0.450/0.510	0.620/0.640	0.490/0.510	0.430/0.510
	5.3	Lowering speed, laden/unladen	m/s	0.500/0.440	0.500/0.450	0.500/0.450	0.500/0.440	0.500/0.450	0.500/0.440	0.500/0.450	0.500/0.450	0.500/0.440	0.500/0.450	0.500/0.450
	5.5	Drawbar pull, laden	N	21000	22000	23000	21000	22000	23000	24000	26000	21000	22000	23000
	5.7	Gradeability, laden	%	27	22	22	26	21	32	30	29	27	22	22
	5.10	Service brake		Hydraulic	Hydraulic	Hydraulic	Hydraulic	Hydraulic	Hydraulic	Hydraulic	Hydraulic	Hydraulic	Hydraulic	Hydraulic
		Parking brake		Mechanical	Mechanical	Mechanical	Mechanical	Mechanical	Mechanical	Mechanical	Mechanical	Mechanical	Mechanical	Mechanical
Combustion-engine	7.1	Engine manufacturer/type		YANMAR 4TNE98	YANMAR 4TNE98	YANMAR 4TNE98	CUMMINS QSF2.8t3NA49	CUMMINS QSF2.8t3NA49	KUBOTA V2607-CR-TE5B	KUBOTA V2607-CR-TE5B	KUBOTA V2607-CR-TE5B	XINCHAI 4D32XG30-011	XINCHAI 4D32XG30-011	XINCHAI 4D32XG30-011
		Emission standard		StageIIIA / EPA Tier3	StageIIIA / EPA Tier3	StageIIIA / EPA Tier3	StageIIIA	StageIIIA	EU StageV / Tier 4f	EU StageV / Tier 4f	EU StageV / Tier 4f	/	/	/
	7.2	Engine power according to DIN ISO 1585	kw/r/min	42.1/2300	42.1/2300	42.1/2300	36.5/2500	36.5/2500	47.3/2400	47.3/2400	47.3/2400	45/2500	45/2500	45/2500
	7.3	Rated speed	N·m/r/min	196/1700	196/1700	196/1700	186/1500	186/1500	221.7/1500	221.7/1500	221.7/1500	200/1500～1800	200/1500～1800	200/1500～1800
	7.4	Number of cylinders/displacement	(-)/(cm^3)	4/3319	4/3319	4/3319	4/2800	4/2800	4/2615	4/2615	4/2615	4/3168	4/3168	4/3168
	7.10	Battery voltage/nominal capacity	V/Ah	12/90	12/90	12/90	12/90	12/90	12/90	12/90	12/90	12/90	12/90	12/90
Addition data	10.3	Hydraulic Tank - capacity (drain & refill)	liter	65	65	65	65	65	50	50	50	65	65	65
	10.4	Fuel tank capacity	liter	65	65	65	65	65	50	50	50	65	65	65

2.5-3.5t Mast:(pneumatic)

Type	Model	Max.fork height	Overall height						Free lift				Front Overhang		Tilt range		Capacity max height					
			Lowered (mm)		Extended				Without backrest (mm)		With backrest (mm)		(mm)		FwD	BwD	Load Center 500mm					
					Without backrest (mm)		With backrest (mm)										ISO 22915-2			ISO 22915-13		
		mm	2.5t	3/3.5t	2.5t	3/3.5t	2.5t	3/3.5t	2.5t	3/3.5t	2.5t	3/3.5t	2.5t	3/3.5t	(°)	(°)	2.5t	3t	3.5t	2.5t	3t	3.5t
Wide view mast	RTE25/35M300	3000	2215	2350	3782	3993	4122	4142	140	145	140	145	585	600	10	12	2500	3000	3500	2500	3000	3500
	RTE25/35M330	3300	2365	2500	4082	4293	4422	4442	140	145	140	145	585	600	10	12	2500	3000	3500	2500	3000	3400
	RTE25/35M350	3500	2465	2600	4282	4493	4622	4642	140	145	140	145	585	600	10	12	2500	3000	3500	2500	2800	3200
	RTE25/35M370	3700	2615	2700	4482	4693	4822	4842	140	145	140	145	585	600	10	12	2500	3000	3500	2500	2600	2800
	RTE25/35M400	4000	2815	2950	4782	4993	5122	5142	140	145	140	145	585	600	10	12	2500	3000	3400	2100	2400	2500
	RTE25/35M450	4500	3065	3200	5282	5493	5622	5642	140	145	140	145	585	600	10	12	2200	2500	3000	1700	2000	2000
Wide view full free triplex mast	RTE25/35N400	4000	2115	2300	4860	5025	5122	5269	1255	1275	993	1031	603	618	10	12	2500	2900	3300	2000	2300	2400
	RTE25/35N430	4300	2215	2400	5160	5325	5422	5569	1355	1375	1093	1131	603	618	10	12	2400	2700	3000	1900	2100	2200
	RTE25/35N450	4500	2265	2450	5360	5525	5622	5769	1405	1425	1143	1181	603	618	10	12	2200	2500	2900	1700	1900	1900
	RTE25/35N470	4700	2365	2550	5560	5725	5822	5969	1505	1525	1243	1281	603	618	10	12	2000	2300	2700	1400	1500	1500
	RTE25/35N500	5000	2515	2700	5860	6025	6122	6269	1655	1675	1393	1431	603	618	6	6	1900	2100	2500	1100	1200	1200
	RTE25/35N550	5500	2715	2900	6360	6525	6622	6769	1855	1875	1593	1631	603	618	6	6	1500	1900	2300	800	900	900
	RTE25/35N600	6000	2965	3150	6860	7025	7122	7269	2105	2125	1843	1881	603	618	6	6	1200	1600	1900	600	700	700

Note: ISO 22915-2 for industrial use; ISO 22915-13 for rough terrain use.